REVISIONS			
REV.	DESCRIPTION	DATE	APPROVED
-		9/6/2023	

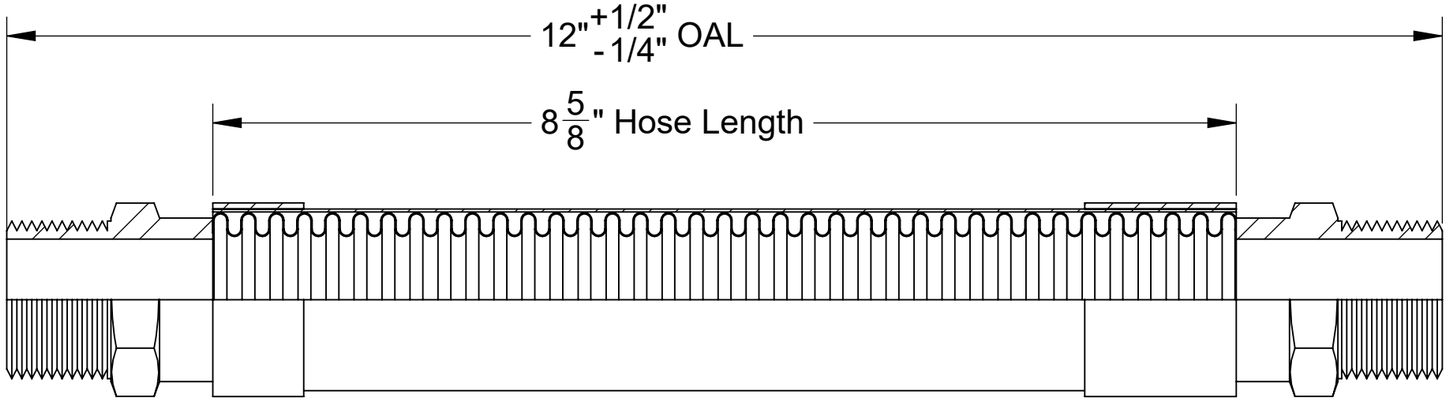

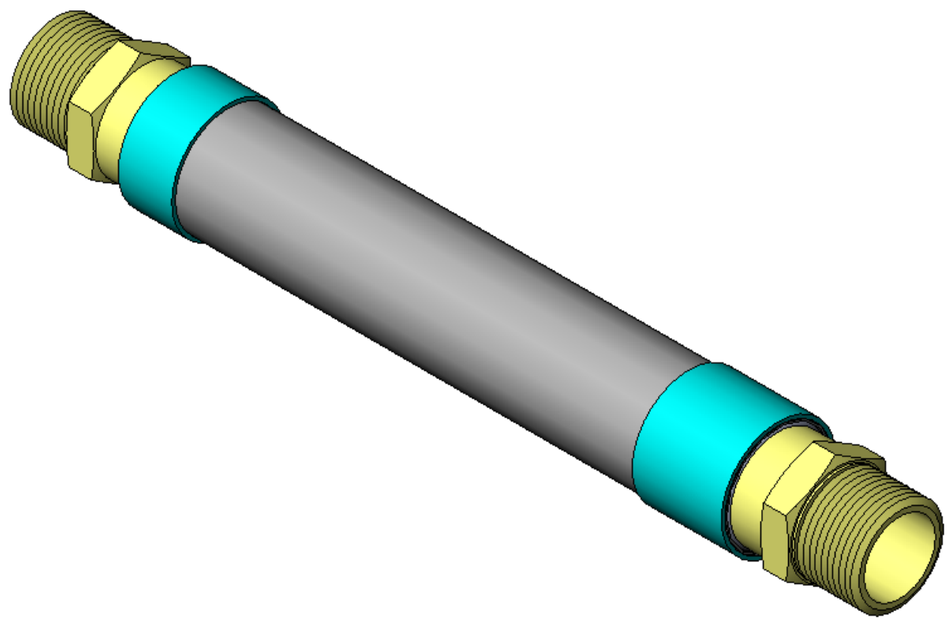

ITEM #	QTY.	PART NUMBER	DESCRIPTION	MATERIAL	WEIGHT
1	1	HOSE	300 Series Stainless Corrugated Hose	Stainless Steel	0.21
2	1	BRAID	300 Series Stainless Steel	Stainless Steel	0.02
3	1	BRAID COLLAR	0.05" Thick	Stainless Steel	0.05
4	1	COLLAR 2	0.05" Thick	Stainless Steel	0.11
5	2	1" MALE	1" Male, 1"x11-1/2" Thread, 1.38" Hex	Stainless Steel	0.27

HOSE MASTER Inc.
1233 East 222nd Street • Cleveland, Ohio 44117
(800) 221-2319 • Fax: (216) 481-7557 • www.hosemaster.com
Locations: Cleveland • Houston

Registered to: ISO 9001 : 2000

NAHAD Metal Hose Listed Manufacturer

Projection:

Customer: Hose Master Inc.

Prepared By: **korteh**

Reference: Fire- Shield - 1" Male x 1" Male x 12" OAL

Date: **9/6/2023**

Description:

1" ID x 12" OAL 300 Series Stainless Corrugated Hose covered by 300 Series Stainless Braid. UL Approved 1" Male Connectors

Drawing #: **FSMM0100x12**

Rev.:

SHEET 1 OF 1

REVISIONS			
REV.	DESCRIPTION	DATE	APPROVED
-		9/6/2023	

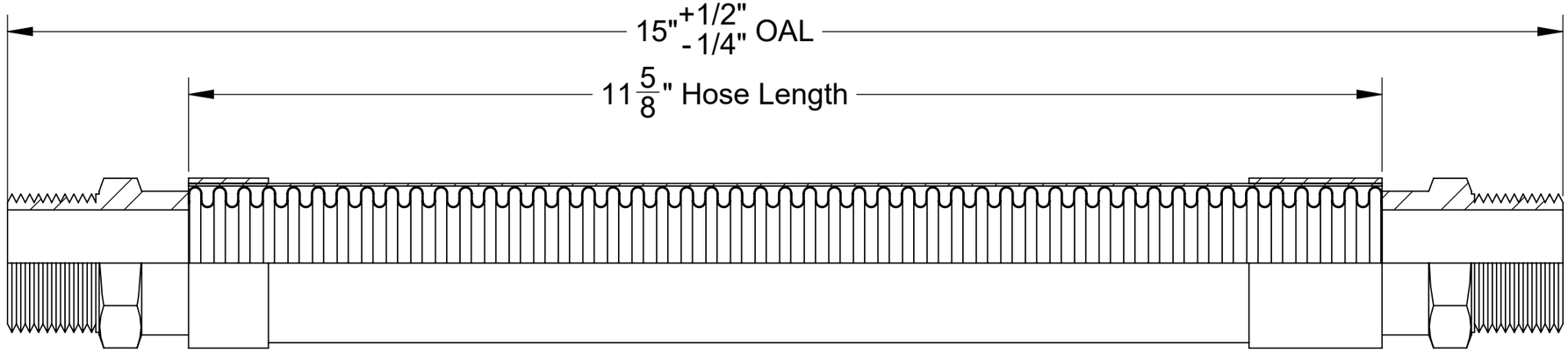

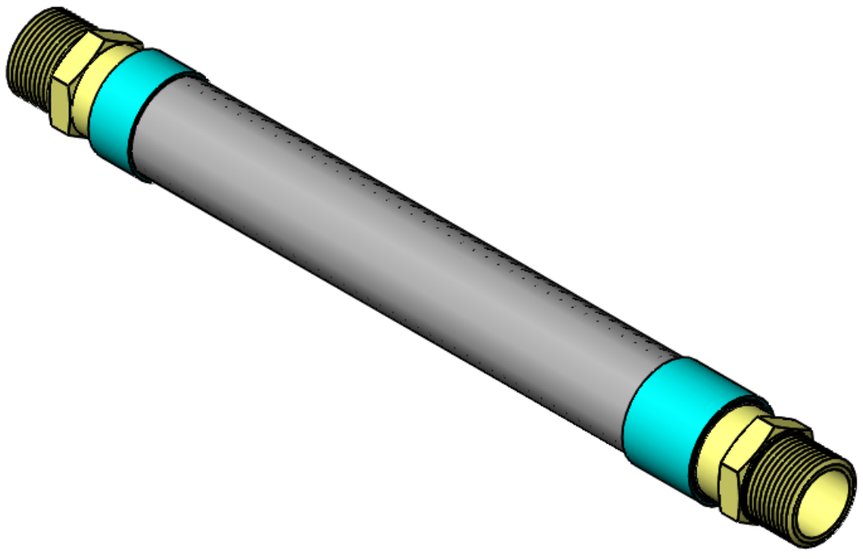

ITEM #	QTY.	PART NUMBER	DESCRIPTION	MATERIAL	WEIGHT
1	1	HOSE	300 Series Stainless Corrugated Hose	Stainless Steel	0.28
2	1	BRAID	300 Series Stainless Steel	Stainless Steel	0.03
3	1	BRAID COLLAR	0.05" Thick	Stainless Steel	0.05
4	1	COLLAR 2	0.05" Thick	Stainless Steel	0.11
5	2	1" MALE	1" Male, 1"x11-1/2" Thread, 1.38" Hex	Stainless Steel	0.27

HOSE MASTER Inc.
1233 East 222nd Street • Cleveland, Ohio 44117
(800) 221-2319 • Fax: (216) 481-7557 • www.hosemaster.com
Locations: ***Cleveland • Houston***
Registered to: ISO 9001 : 2000
NAHAD Metal Hose Listed Manufacturer

Projection:

Customer: Hose Master Inc.

Prepared By: **korteh**

Reference: Fire- Shield - 1" Male x 1" Male x 15" OAL

Date: **9/6/2023**

Description:

1" ID x 15" OAL 300 Series Stainless Corrugated Hose covered by 300 Series Stainless Braid. UL Approved 1" Male Connectors

Drawing #: **FSMM0100x15**

Rev.:

SHEET 1 OF 1

REVISIONS			
REV.	DESCRIPTION	DATE	APPROVED
-		9/6/2023	

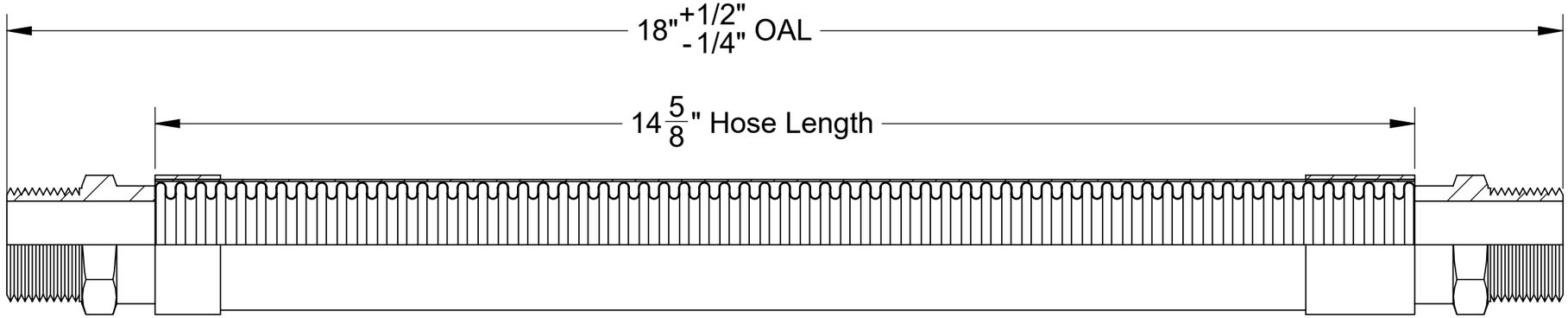

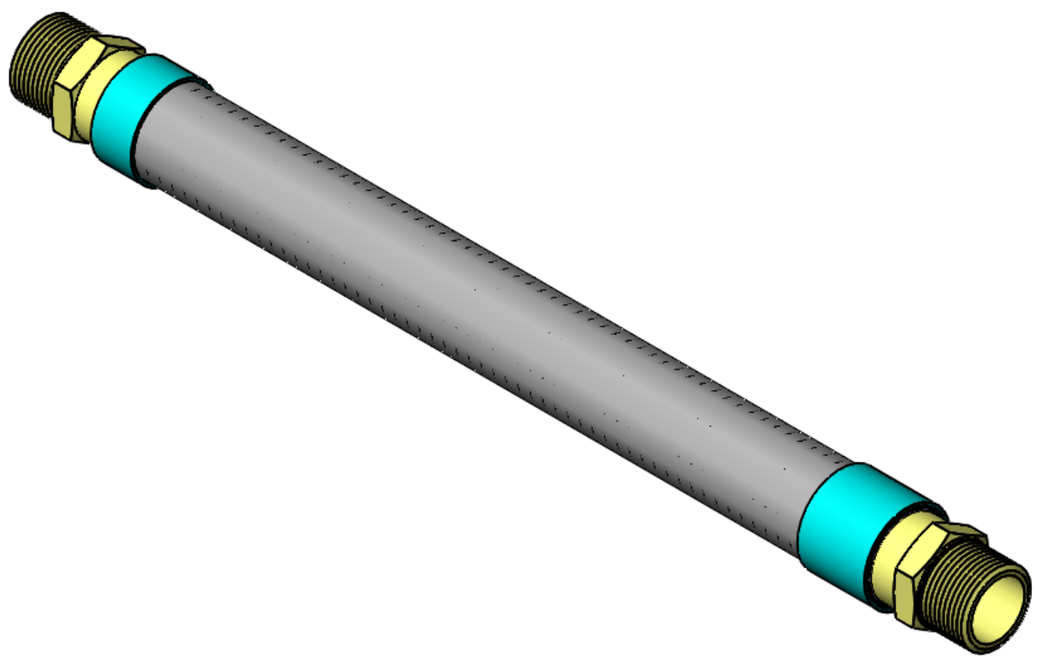

ITEM #	QTY.	PART NUMBER	DESCRIPTION	MATERIAL	WEIGHT
1	1	HOSE	300 Series Stainless Corrugated Hose	Stainless Steel	0.35
2	1	BRAID	300 Series Stainless Steel	Stainless Steel	0.04
3	1	BRAID COLLAR	0.05" Thick	Stainless Steel	0.05
4	1	COLLAR 2	0.05" Thick	Stainless Steel	0.11
5	2	1" MALE	1" Male, 1"x11-1/2" Thread, 1.38" Hex	Stainless Steel	0.27

HOSE MASTER Inc.
1233 East 222nd Street • Cleveland, Ohio 44117
(800) 221-2319 • Fax: (216) 481-7557 • www.hosemaster.com
Locations: **Cleveland • Houston**
Registered to: ISO 9001 : 2000
NAHAD Metal Hose Listed Manufacturer

Projection:

Customer: Hose Master Inc.

Prepared By: **korteh**

Reference: Fire- Shield - 1" Male x 1" Male x 18" OAL

Date: **9/6/2023**

Description:

1" ID x 18" OAL 300 Series Stainless Corrugated Hose covered by 300 Series Stainless Braid. UL Approved 1" Male Connectors

Drawing #: **FSMM0100x18**

Rev.:

SHEET 1 OF 1

REVISIONS			
REV.	DESCRIPTION	DATE	APPROVED
-		9/6/2023	

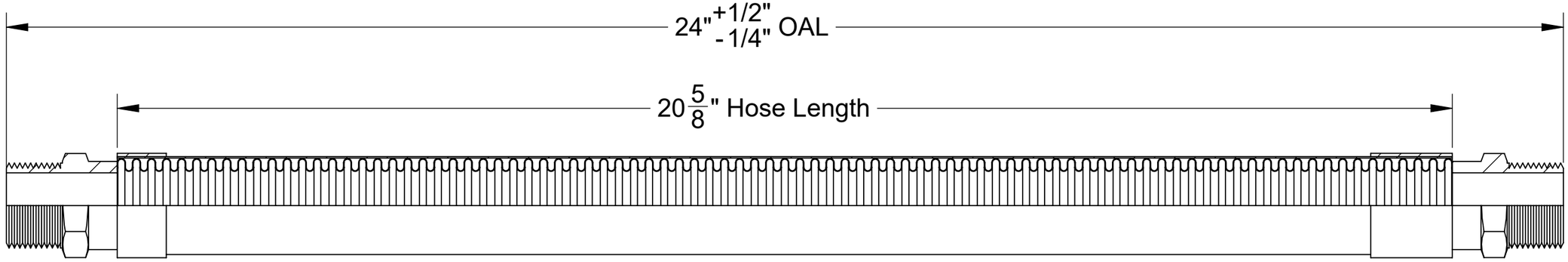

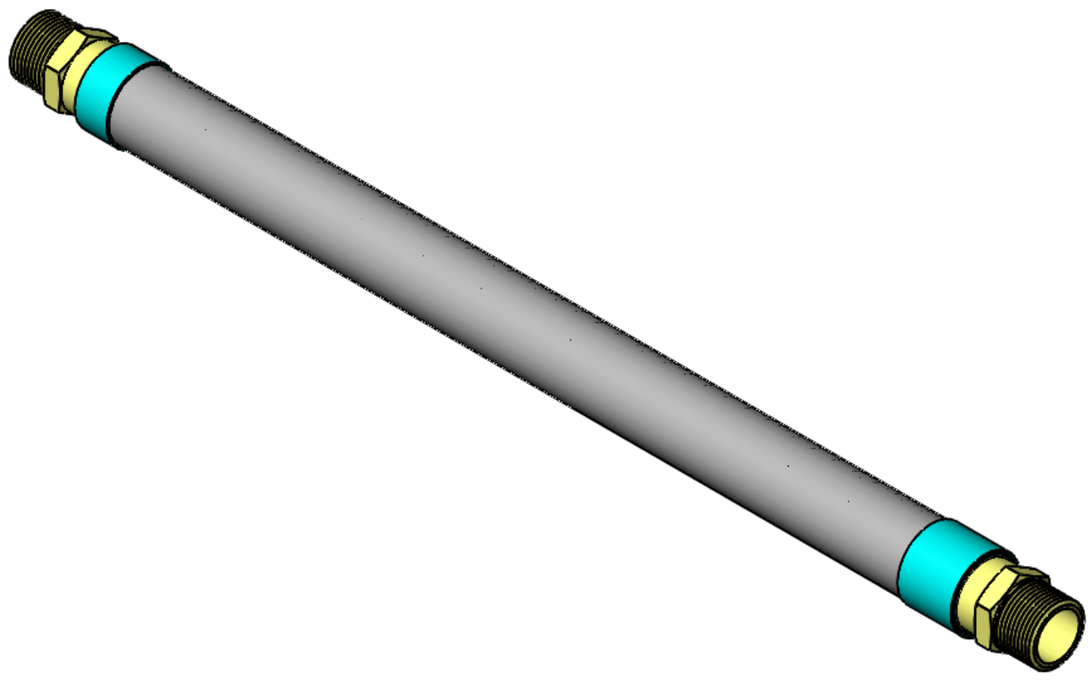

ITEM #	QTY.	PART NUMBER	DESCRIPTION	MATERIAL	WEIGHT
1	1	HOSE	300 Series Stainless Corrugated Hose	Stainless Steel	0.50
2	1	BRAID	300 Series Stainless Steel	Stainless Steel	0.06
3	1	BRAID COLLAR	0.05" Thick	Stainless Steel	0.05
4	1	COLLAR 2	0.05" Thick	Stainless Steel	0.11
5	2	1" MALE	1" Male, 1"x11-1/2" Thread, 1.38" Hex	Stainless Steel	0.27

HOSE MASTER Inc.
1233 East 222nd Street • Cleveland, Ohio 44117
(800) 221-2319 • Fax: (216) 481-7557 • www.hosemaster.com
Locations: ***Cleveland • Houston***

Registered to: ISO 9001 : 2000

NAHAD Metal Hose Listed Manufacturer

Projection:

Customer: Hose Master Inc.

Prepared By: **korteh**

Reference: Fire- Shield - 1" Male x 1" Male x 24" OAL

Date: **9/6/2023**

Description:

1" ID x 24" OAL 300 Series Stainless Corrugated Hose covered by 300 Series Stainless Braid. UL Approved 1" Male Connectors

Drawing #: **FSMM0100x24**

Rev.:

SHEET 1 OF 1

REVISIONS			
REV.	DESCRIPTION	DATE	APPROVED
-		9/6/2023	

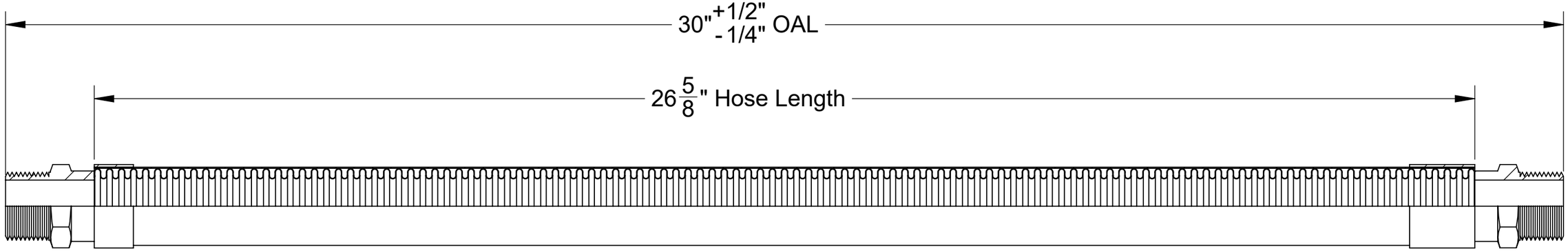

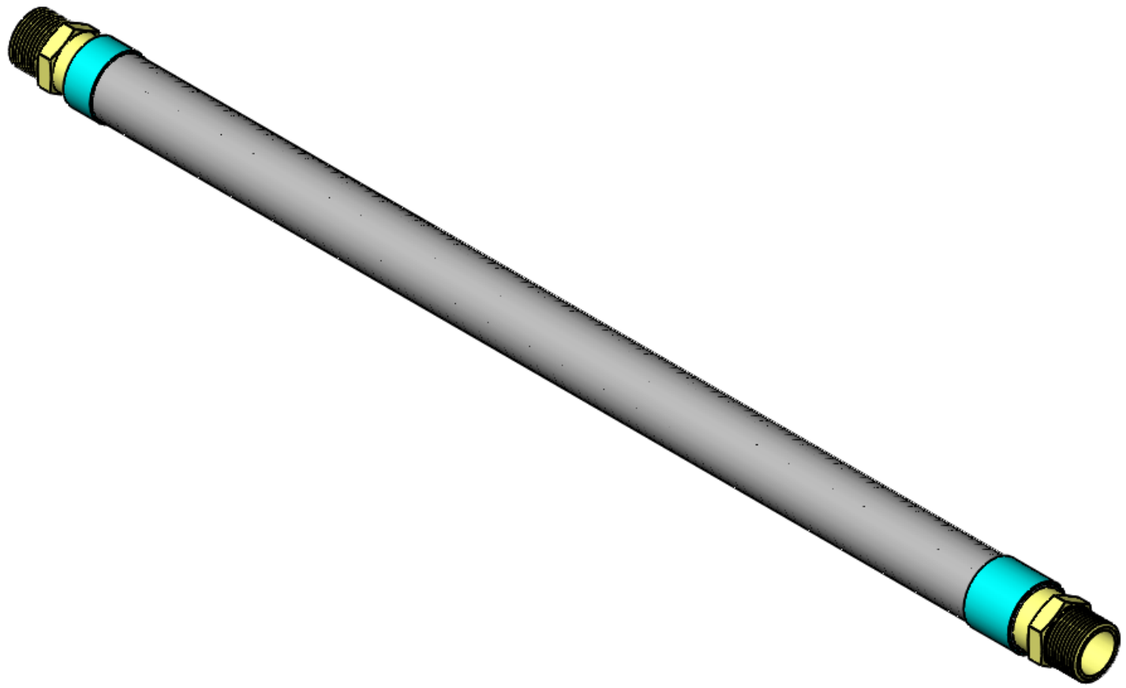

ITEM #	QTY.	PART NUMBER	DESCRIPTION	MATERIAL	WEIGHT
1	1	HOSE	300 Series Stainless Corrugated Hose	Stainless Steel	0.64
2	1	BRAID	300 Series Stainless Steel	Stainless Steel	0.07
3	1	BRAID COLLAR	0.05" Thick	Stainless Steel	0.05
4	1	COLLAR 2	0.05" Thick	Stainless Steel	0.11
5	2	1" MALE	1" Male, 1"x11-1/2" Thread, 1.38" Hex	Stainless Steel	0.27

HOSE MASTER Inc.
1233 East 222nd Street • Cleveland, Ohio 44117
(800) 221-2319 • Fax: (216) 481-7557 • www.hosemaster.com
Locations: **Cleveland • Houston**
Registered to: ISO 9001 : 2000
NAHAD Metal Hose Listed Manufacturer

Projection:

Customer: Hose Master Inc.

Prepared By: **korteh**

Reference: Fire- Shield - 1" Male x 1" Male x 30" OAL

Date: **9/6/2023**

Description:

1" ID x 30" OAL 300 Series Stainless Corrugated Hose covered by 300 Series Stainless Braid. UL Approved 1" Male Connectors

Drawing #: **FSMM0100x30**

Rev.:

SHEET 1 OF 1