REVISIONS			
REV.	DESCRIPTION	DATE	APPROVED
-		8/25/2023	

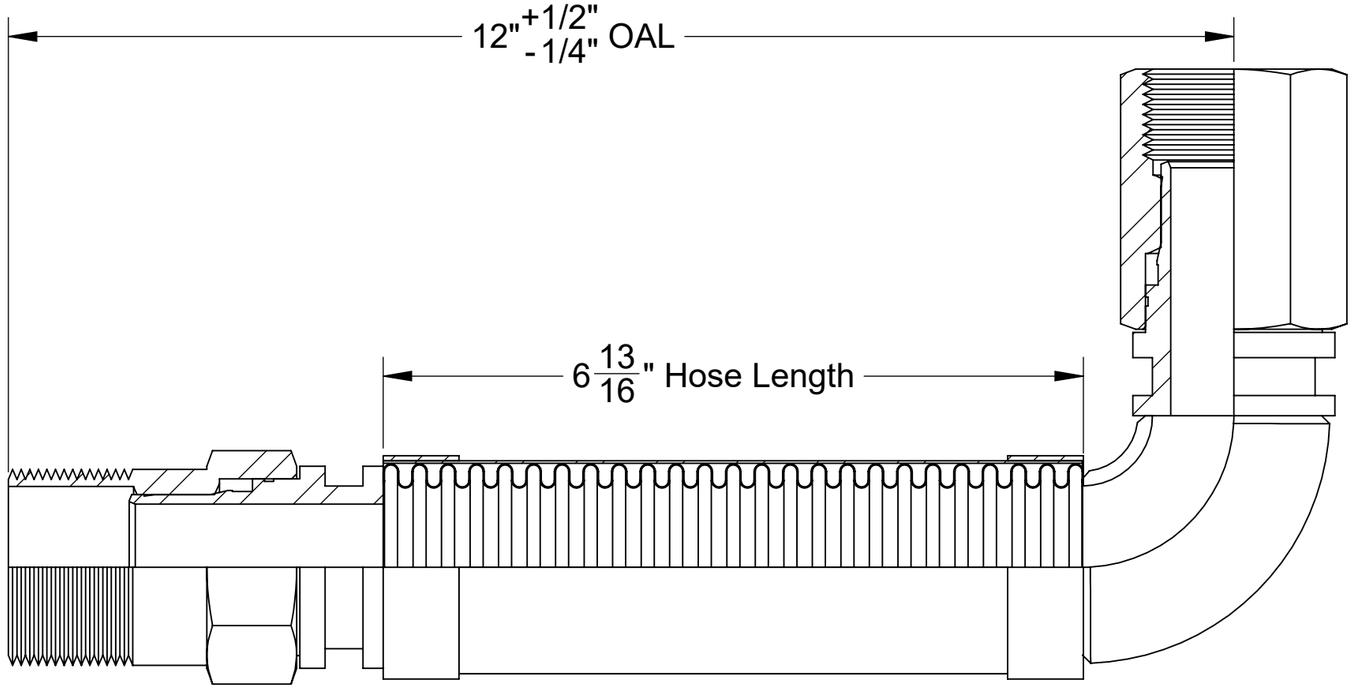

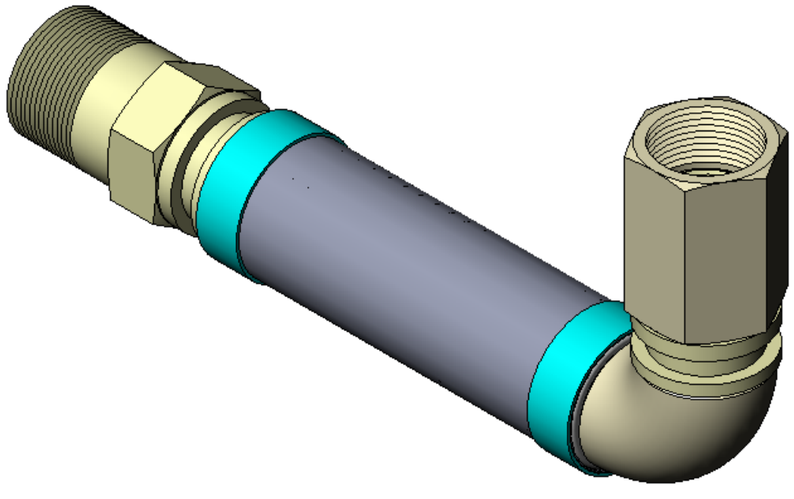

----- COMPONENTS LIST -----

ITEM #	QTY.	PART NUMBER	DESCRIPTION	MATERIAL	WEIGHT
1	1	HOSE	300 Series Stainless Corrugated Hose	Stainless Steel	0.29
2	2	BRAID	300 Series Stainless Steel	Stainless Steel	0.03
3	1	BRAID COLLAR	0.05" Thick	Stainless Steel	0.07
4	1	1.5" MALE SWIVEL	1.5" Male Swivel, 1-1/2"x11-1/2" Thread, 1.94" Hex	Stainless Steel	1.40
5	1	1.5" ELBOW	1.5" Short Radius Elbow, Sch. 40	Stainless Steel	0.35
6	1	2" FEMALE SWIVEL	2" Female Swivel, 2"x11-1/2" Thread, 2.38" Hex	Stainless Steel	2.75

HOSE MASTER
1233 East 222nd Street • Cleveland, Ohio 44117
(800) 221-2319 • Fax: (216) 481-7557 • www.hosemaster.com
Cleveland • Houston • Atlanta • Reno

ISO 9001
Registered Quality System

NAHAD Listed Manufacturer

REFERENCE: Fire-Shield-1.5" Male Swivel x 2" 90 Degree Female Swivel x 12" OAL

DATE: 9/7/2023

DESCRIPTION:
1.5" ID x 12" OAL 300 Series Stainless Corrugated Hose covered by 300 Series Stainless Braid. UL Approved 1.5" Male Swivel Connector x 2" ID 90 Degree Female Swivel Connector

PROJECTION:

DRAWING # **FSS2WE0150x12**

REV.

SHEET 1 OF 1

REVISIONS			
REV.	DESCRIPTION	DATE	APPROVED
-		8/25/2023	

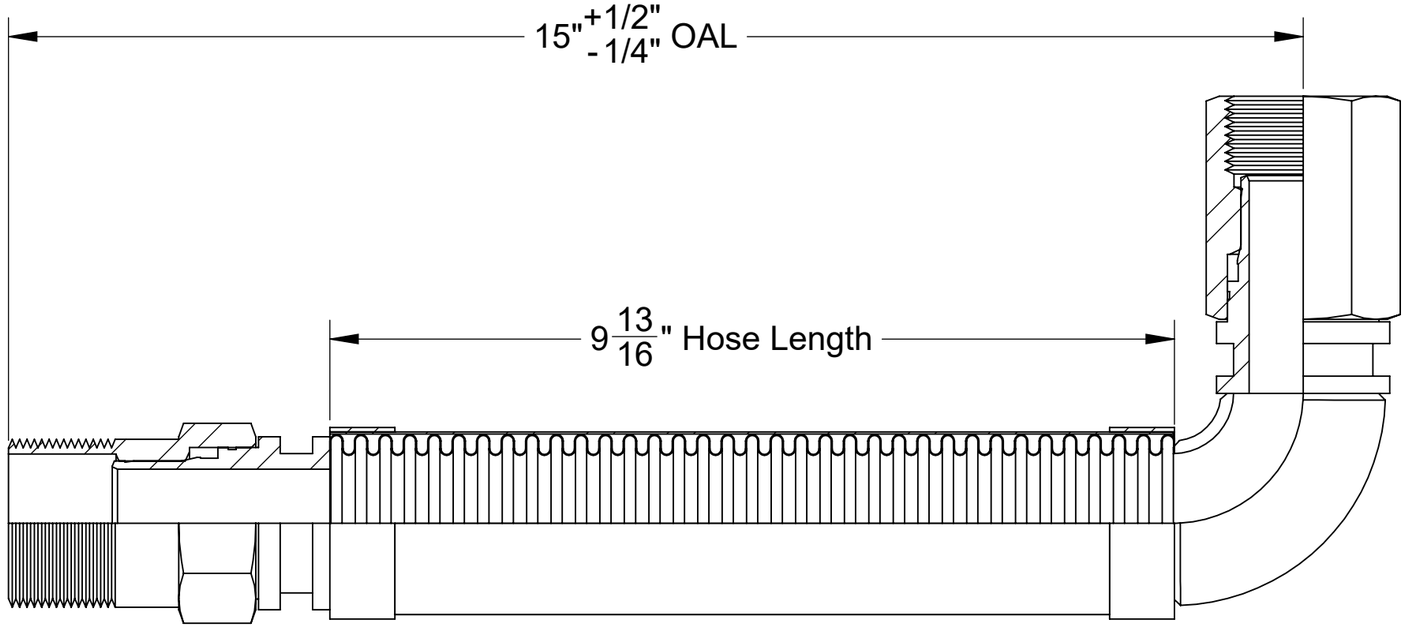

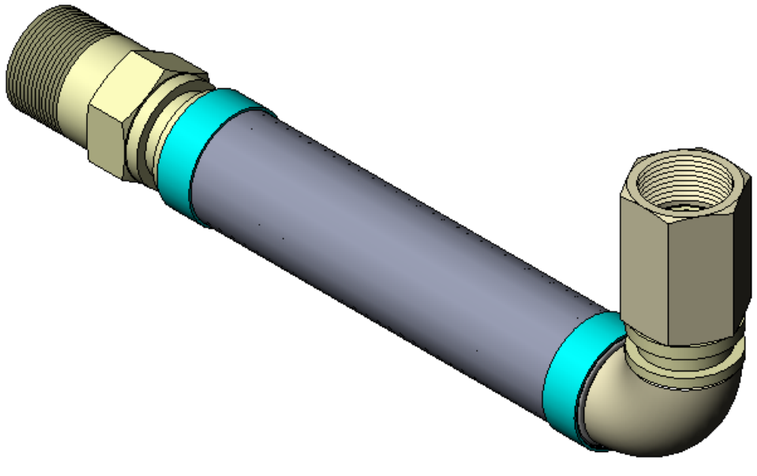

----- COMPONENTS LIST -----

ITEM #	QTY.	PART NUMBER	DESCRIPTION	MATERIAL	WEIGHT
1	1	HOSE	300 Series Stainless Corrugated Hose	Stainless Steel	0.42
2	2	BRAID	300 Series Stainless Steel	Stainless Steel	0.04
3	1	BRAID COLLAR	0.05" Thick	Stainless Steel	0.07
4	1	1.5" MALE SWIVEL	1.5" Male Swivel, 1-1/2"x11-1/2" Thread, 1.94" Hex	Stainless Steel	1.40
5	1	1.5" ELBOW	1.5" Short Radius Elbow, Sch. 40	Stainless Steel	0.35
6	1	2" FEMALE SWIVEL	2" Female Swivel, 2"x11-1/2" Thread, 2.38" Hex	Stainless Steel	2.75

HOSE MASTER
1233 East 222nd Street • Cleveland, Ohio 44117
(800) 221-2319 • Fax: (216) 481-7557 • www.hosemaster.com
Cleveland • Houston • Atlanta • Reno

ISO 9001
Registered Quality System

NAHAD Listed Manufacturer

REFERENCE: Fire-Shield-1.5" Male Swivel x 2" 90 Degree Female Swivel x 15" OAL

DATE: 9/7/2023

DESCRIPTION:
1.5" ID x 15" OAL 300 Series Stainless Corrugated Hose covered by 300 Series Stainless Braid. UL Approved 1.5" Male Swivel Connector x 2" ID 90 Degree Female Swivel Connector

PROJECTION:

DRAWING # **FSS2WE0150x15**

REV.

SHEET 1 OF 1

REVISIONS			
REV.	DESCRIPTION	DATE	APPROVED
-		8/25/2023	

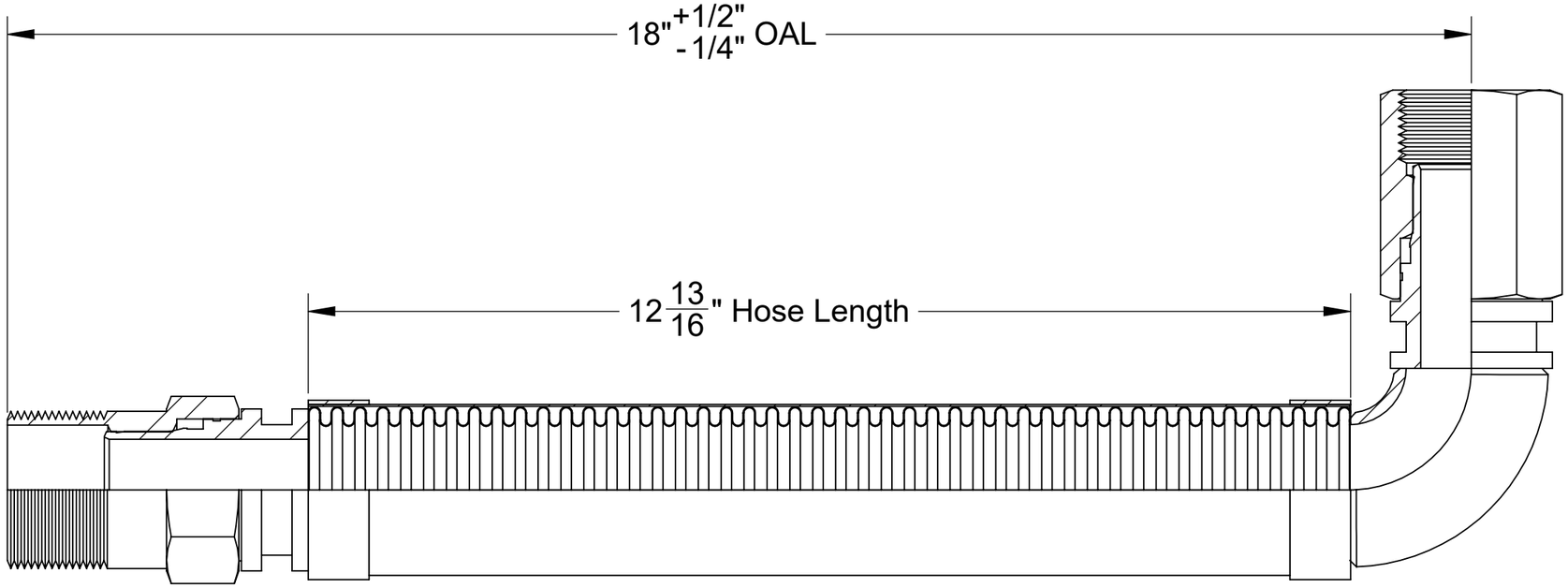

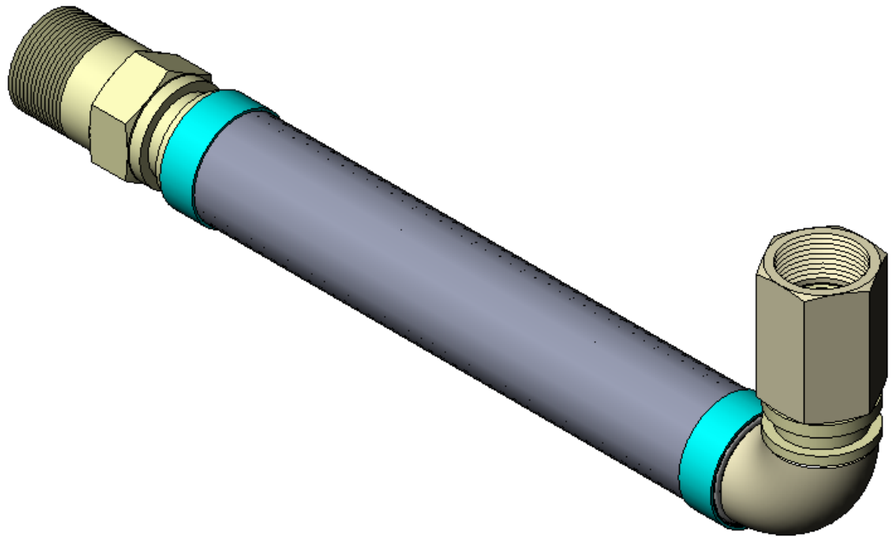

----- COMPONENTS LIST -----

ITEM #	QTY.	PART NUMBER	DESCRIPTION	MATERIAL	WEIGHT
1	1	HOSE	300 Series Stainless Corrugated Hose	Stainless Steel	0.55
2	2	BRAID	300 Series Stainless Steel	Stainless Steel	0.05
3	1	BRAID COLLAR	0.05" Thick	Stainless Steel	0.07
4	1	1.5" MALE SWIVEL	1.5" Male Swivel, 1-1/2"x11-1/2" Thread, 1.94" Hex	Stainless Steel	1.40
5	1	1.5" ELBOW	1.5" Short Radius Elbow, Sch. 40	Stainless Steel	0.35
6	1	2" FEMALE SWIVEL	2" Female Swivel, 2"x11-1/2" Thread, 2.38" Hex	Stainless Steel	2.75

HOSE MASTER
1233 East 222nd Street • Cleveland, Ohio 44117
(800) 221-2319 • Fax: (216) 481-7557 • www.hosemaster.com
Cleveland • Houston • Atlanta • Reno

ISO 9001
Registered Quality System

NAHAD Listed Manufacturer

REFERENCE: Fire-Shield-1.5" Male Swivel x 2" 90 Degree Female Swivel x 18" OAL

DATE: 9/7/2023

DESCRIPTION:
1.5" ID x 18" OAL 300 Series Stainless Corrugated Hose covered by 300 Series Stainless Braid. UL Approved 1.5" Male Swivel Connector x 2" ID 90 Degree Female Swivel Connector

PROJECTION:

DRAWING # FSS2WE0150x18

REV.

SHEET 1 OF 1

REVISIONS			
REV.	DESCRIPTION	DATE	APPROVED
-		8/25/2023	

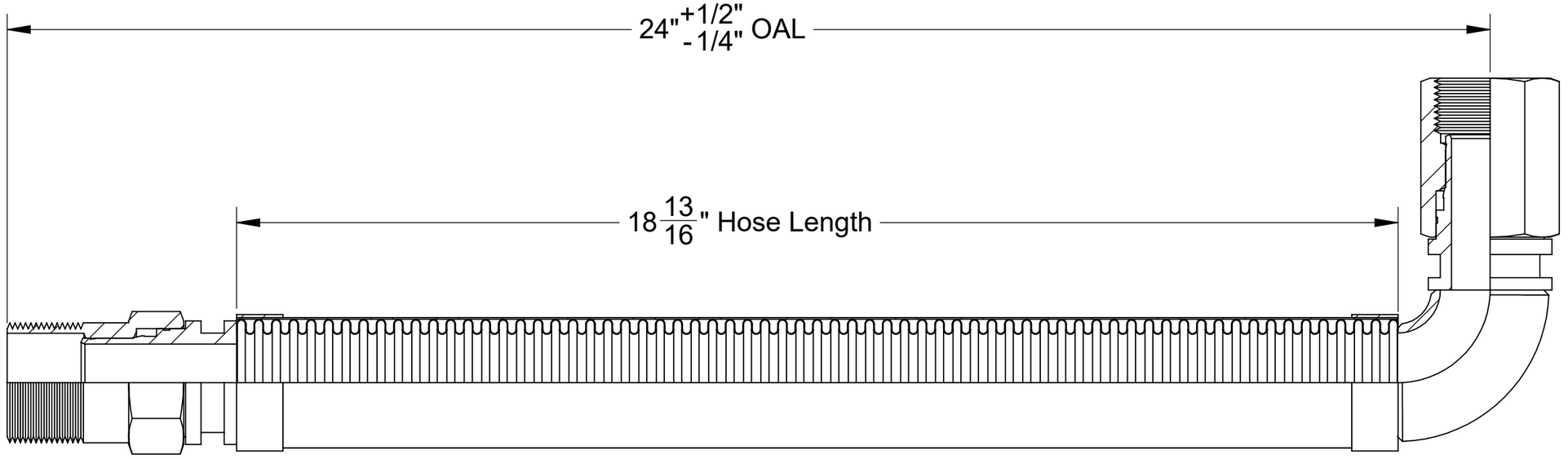

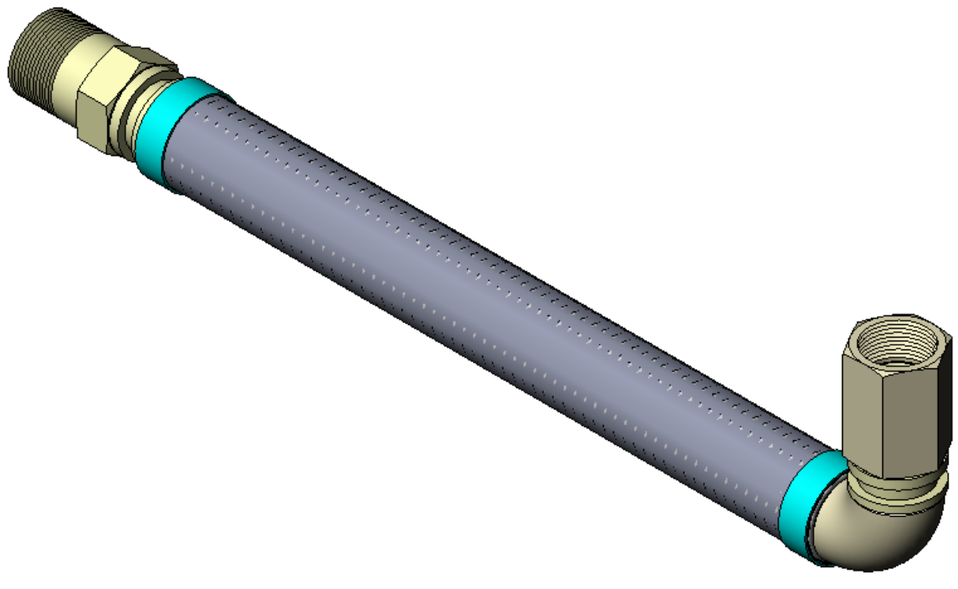

----- COMPONENTS LIST -----

ITEM #	QTY.	PART NUMBER	DESCRIPTION	MATERIAL	WEIGHT
1	1	HOSE	300 Series Stainless Corrugated Hose	Stainless Steel	0.80
2	2	BRAID	300 Series Stainless Steel	Stainless Steel	0.07
3	1	BRAID COLLAR	0.05" Thick	Stainless Steel	0.07
4	1	1.5" MALE SWIVEL	1.5" Male Swivel, 1-1/2"x11-1/2" Thread, 1.94" Hex	Stainless Steel	1.40
5	1	1.5" ELBOW	1.5" Short Radius Elbow, Sch. 40	Stainless Steel	0.35
6	1	2" FEMALE SWIVEL	2" Female Swivel, 2"x11-1/2" Thread, 2.38" Hex	Stainless Steel	2.75

HOSE MASTER
1233 East 222nd Street • Cleveland, Ohio 44117
(800) 221-2319 • Fax: (216) 481-7557 • www.hosemaster.com
Cleveland • Houston • Atlanta • Reno

ISO 9001
Registered Quality System

NAHAD Listed Manufacturer

REFERENCE: Fire-Shield-1.5" Male Swivel x 2" 90 Degree Female Swivel x 24" OAL

DATE: 9/7/2023

DESCRIPTION:
1.5" ID x 24" OAL 300 Series Stainless Corrugated Hose covered by 300 Series Stainless Braid. UL Approved 1.5" Male Swivel Connector x 2" ID 90 Degree Female Swivel Connector

PROJECTION:

DRAWING # **FSS2WE0150x24**

REV.

SHEET 1 OF 1

REVISIONS			
REV.	DESCRIPTION	DATE	APPROVED
-		8/25/2023	

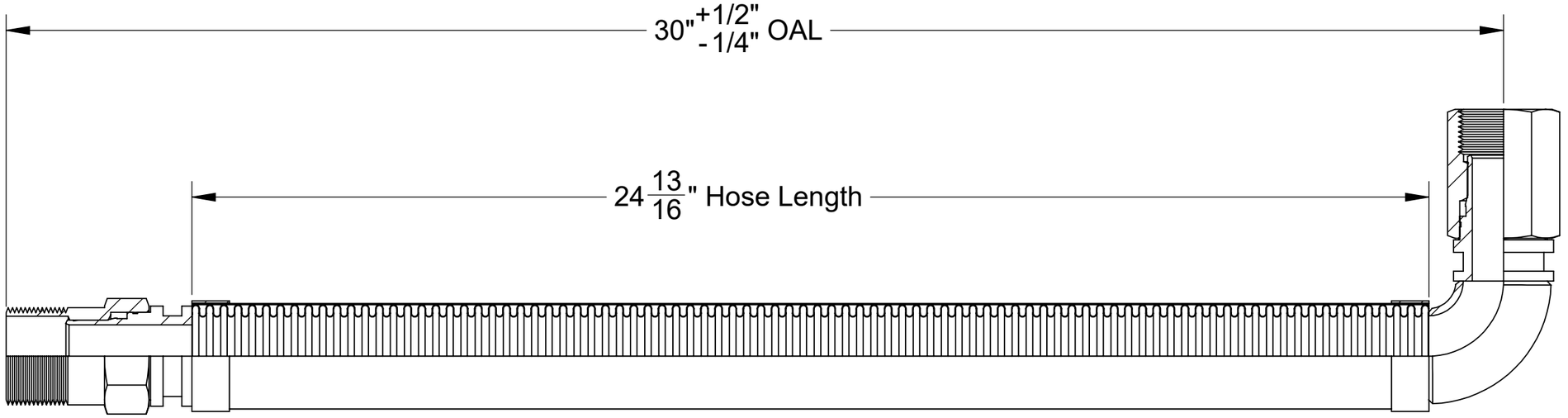

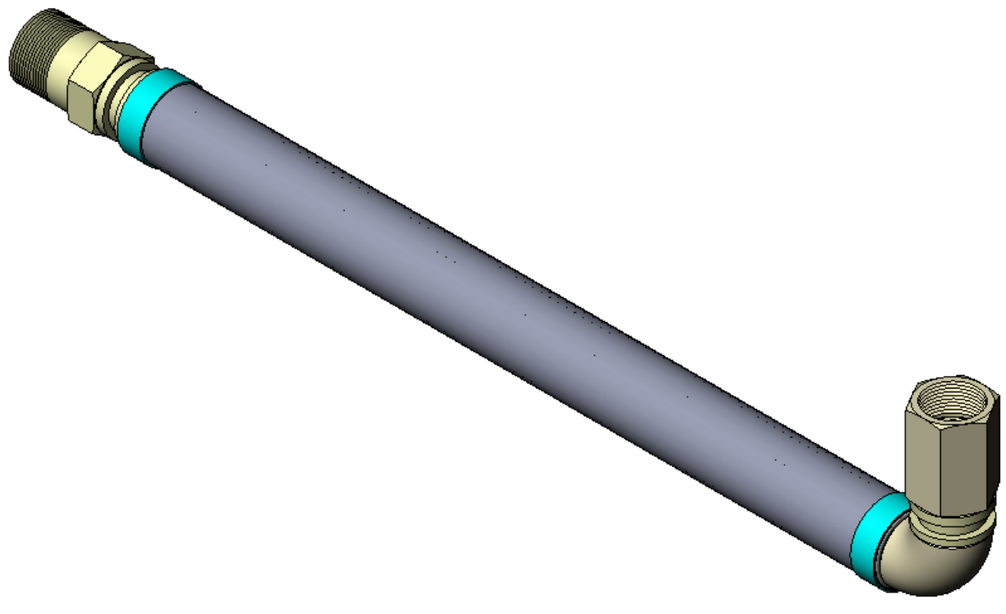

----- COMPONENTS LIST -----

ITEM #	QTY.	PART NUMBER	DESCRIPTION	MATERIAL	WEIGHT
1	1	HOSE	300 Series Stainless Corrugated Hose	Stainless Steel	1.06
2	2	BRAID	300 Series Stainless Steel	Stainless Steel	0.10
3	1	BRAID COLLAR	0.05" Thick	Stainless Steel	0.07
4	1	1.5" MALE SWIVEL	1.5" Male Swivel, 1-1/2"x11-1/2" Thread, 1.94" Hex	Stainless Steel	1.40
5	1	1.5" ELBOW	1.5" Short Radius Elbow, Sch. 40	Stainless Steel	0.35
6	1	2" FEMALE SWIVEL	2" Female Swivel, 2"x11-1/2" Thread, 2.38" Hex	Stainless Steel	2.75

HOSE MASTER
1233 East 222nd Street • Cleveland, Ohio 44117
(800) 221-2319 • Fax: (216) 481-7557 • www.hosemaster.com
Cleveland • Houston • Atlanta • Reno

ISO 9001
Registered Quality System

NAHAD Listed Manufacturer

REFERENCE: Fire-Shield-1.5" Male Swivel x 2" 90 Degree Female Swivel x 30" OAL

DATE: 9/7/2023

DESCRIPTION:
1.5" ID x 30" OAL 300 Series Stainless Corrugated Hose covered by 300 Series Stainless Braid. UL Approved 1.5" Male Swivel Connector x 2" ID 90 Degree Female Swivel Connector

PROJECTION:

DRAWING # **FSS2WE0150x30**

REV.

SHEET 1 OF 1